U.S. Fish & Wildlife Service

Estimated Abundance of Adult Fall Chum Salmon in the Middle Yukon River, Alaska, 2005 – Final Report

Alaska Fisheries Technical Report Number 89

Fairbanks Fish and Wildlife Field Office
Fairbanks, Alaska
September 2006

The Alaska Region Fisheries Program of the U.S. Fish and Wildlife Service conducts fisheries monitoring and population assessment studies throughout many areas of Alaska. Dedicated professional staff located in Anchorage, Juneau, Fairbanks, Kenai, and King Salmon Fish and Wildlife Field Offices and the Anchorage Conservation Genetics Laboratory serve as the core of the Program's fisheries management study efforts. Administrative and technical support is provided by staff in the Anchorage Regional Office. Our program works closely with the Alaska Department of Fish and Game and other partners to conserve and restore Alaska's fish populations and aquatic habitats. Additional information about the Fisheries Program and work conducted by our field offices can be obtained at:

http://alaska.fws.gov/fisheries/index.htm

The Alaska Region Fisheries Program reports its study findings through two regional publication series. The **Alaska Fisheries Data Series** was established to provide timely dissemination of data to local managers and for inclusion in agency databases. The **Alaska Fisheries Technical Reports** publishes scientific findings from single and multi-year studies that have undergone more extensive peer review and statistical testing. Additionally, some study results are published in a variety of professional fisheries journals.

Disclaimer: The use of trade names of commercial products in this report does not constitute endorsement or recommendation for use by the federal government.

Alaska Fisheries Technical Report Number 89, September 2006
U.S. Fish and Wildlife Service

Estimated Abundance of Adult Fall Chum Salmon in the Middle Yukon River, Alaska, 2005 – Final Report

Christine K. Apodaca and David W. Daum

Abstract

Mark and recapture data were collected to estimate the abundance of fall chum salmon *Oncorhynchus keta* during 2005 in the middle Yukon River, above the Tanana River confluence. Weekly stratum estimates of migrating fall chum salmon were generated for a period of approximately seven weeks between 28 July and 17 September 2005. Fish were captured with north and south bank fish wheels at the marking site and a north bank fish wheel at the recovery site. Color-coded spaghetti tags were applied to 21,072 fish at the marking site. Of the 113,587 chum salmon examined from video recordings at the recovery site, 1,212 (≈1%) fish were tagged and tag status of 1,223 (≈1%) fish could not be determined. Using a Darroch estimator, the estimated abundance of fall chum salmon migrating through the main-stem Yukon River in 2005 was 1,987,982 fish (SE 59,797) for the sampling period. Our estimate was 29% greater than the 2005 run reconstruction for fall chum salmon in the upper Yukon River. The run reconstruction included the combined total of tributary escapements (Chandalar, Sheenjek, and Fishing Branch rivers), harvest estimates above the study area, and a Canadian border passage estimate of fall chum salmon. An annotated bibliography is appended to this final report that references, in chronological order, all past studies related to this project, i.e., yearly abundance estimates and handling effects studies.

Introduction

Since 1996, the U.S. Fish and Wildlife Service (USFWS) has generated weekly in-season estimates of adult fall chum salmon *Oncorhynchus keta* abundance in the middle Yukon River, above the Tanana River confluence. The tagging project is designed as a two-event, temporally stratified mark-recapture experiment. During the first two years of the study we established that the Darroch (1961) estimator could be successfully applied in the conditions found on the Yukon River (Gordon et al. 1998; Underwood et al. 2000a). The Darroch estimator has been used in all subsequent years (Appendix 1), except in 2000 when the project did not operate for the full season due to a low return (Underwood and Bromaghin 2003).

Throughout the history of this project we have worked to evaluate and reduce our impact on captured fish. Biologists associated with this project have raised concerns about the impact the Rampart-Rapids tagging study might have on the survivorship of Yukon River fall chum salmon (Underwood et al. 2002; Burek and Underwood 2002; Bromaghin and Underwood 2003, 2004; Bromaghin et al. 2004; Underwood et al. 2004; Appendix 1). As a result, during the past several years, we have worked to improve our protocol to reduce the impact we have on captured fish by: (1) upgrading the quality of fish wheel materials (padding on and around the chute and improved netting on the baskets); (2) reducing the amount of time fish are held in

Authors: Christine K. Apodaca and David W. Daum are fisheries biologists with the U.S. Fish and Wildlife Service. The authors can be contacted at the Fairbanks Fish and Wildlife Field Office, 101 12th Avenue, Room 110, Fairbanks, Alaska 99701; or Chrissy_Apodaca@fws.gov and David_Daum@fws.gov.

dip nets and in the fish wheel live-box at the marking site; and (3) switching to a video recovery system to eliminate handling at the recapture site. In previous years of this study, captured fish were held for varying amounts of time in the recovery wheel live-box during hours when the crew was not present (over-night and during crew breaks). Holding also occurred, to varying degrees, at the marking site between 1996 and 2002. Since 2003 we have eliminated holding at both the marking and recovery sites in an effort to minimize stress experienced by captured fish (Apodaca et al. 2004; Apodaca and Daum 2005).

During the past several years, the in-season abundance estimates provided by the Rampart-Rapids tagging project became an important component of the monitoring program for Yukon River fall chum salmon. Due to low run sizes from 1998 to 2002, Yukon River fisheries managers and fishers became increasingly concerned with maintaining healthy fall chum salmon populations. To prevent harvest-related population decline, fisheries managers have actively reduced harvest rates throughout the Yukon River drainage by restricting or closing commercial harvest of fall chum salmon and reducing subsistence opportunities when needed (Lingnau and Bue 2004). To assess appropriate times to open and close fisheries, Yukon River fisheries managers rely upon available data on run timing and abundance throughout the drainage (JTC 2006). The location of the Rampart-Rapids tagging study site made this project particularly valuable for in-season management of the salmon fishery in the middle and upper regions of the Yukon River. Additionally, fisheries managers with the Alaska Department of Fish and Game (ADF&G) used the Rampart-Rapids daily catch-per-unit-effort (CPUE) data as an index of run timing into the upper Yukon River drainage. The main-stem abundance estimate has been used in conjunction with the Tanana River abundance estimate to evaluate the run distribution between the two major portions of the drainage and has had a significant influence on management decisions in recent years (F. Bue, ADF&G, personal communication).

Due to high operational costs, reduced available federal funding, and re-prioritization of in-season run assessment projects prior to the 2006 season, the Rampart-Rapids tagging project has been cancelled after the 2005 field season. In this report we document the fall chum salmon population estimate generated by the mark-recapture study in 2005. Appended to this year's report is an annotated bibliography of all past studies related to this project, i.e., abundance estimates and handling effects studies (Appendix 1).

Study Area

The Yukon River is the fourth largest river basin in North America, with a drainage of more than 855,000 km^2 (Brabets et al. 2000). Three tributaries of the Yukon River, the Koyukuk, Tanana, and Porcupine rivers, are major waterways unto themselves with drainages of 91,000, 114,737, and 117,000 km^2, respectively (Brabets et al. 2000).

Our study site is located on the main-stem Yukon River, 58 km upstream from the Tanana River confluence (Figure 1). The site was selected to minimize capture of fall chum salmon returning to the Tanana River drainage, which constitutes the only known area of substantial fall chum salmon spawning downstream from the study area. The marking site was located in a narrow canyon 1,176 km upstream from the mouth of the Yukon River that is locally known as "The Rapids". The recapture site was 52 km upstream from the marking site near the village of Rampart, Alaska.

The middle Yukon River, upstream of the Tanana River, is almost 2 km wide at its widest point, and has a flow rate of 6 to 12 km per hour. Water height in the middle river fluctuates within and between years (Figure 2). Due to the glacial origins of some of its tributaries, the Yukon River is very silty during the summer but begins to clear during the fall. The region experiences a continental climate with long, cold winters and brief, warm summers. Air temperatures below freezing are common from September through April. Mean daily water temperature measured at the marking site in 2005 averaged 15˚C between 15 June and 24 September 2005, ranging from 19˚C on 20 July to 8˚C on 24 September (Figure 3). The river usually freezes by late October or November, and the ice remains until May of the following year.

Methods

Fish Wheel Schedule and Placement

Under contract with the USFWS, local fishermen operated and maintained fish wheels at the marking and recovery sites, respectively. Two fish wheels were operated at the marking site. One was operated from the south bank and the other was operated from the north bank (Figure 1) as needed to accommodate the marking schedule (Table 1). A single recovery wheel was operated 24 hours a day, seven days a week, at the Rampart recapture site (Figure 1).

Fish wheel placement relative to shore was determined by the basket depth of the dip on the shoreward edge of the baskets (Figure 4). This edge was positioned to sweep within 30 cm of the bottom. To maintain the same proximity to the bottom, fish wheels were moved relative to shore as the water level rose or fell. A lead, in the form of a submerged picket fence, was placed between the wheel and the shore to direct fish toward the dipping baskets. The river at the marking site was deeper than at the recapture site, so the fish wheels were sized accordingly. Baskets on the marking fish wheel were approximately 3.0 m wide and dipped to a depth of 4.5 m below the water surface, whereas baskets on the recapture fish wheel were approximately 2.5 m wide and dipped 3.0 m below the water surface.

Marking Site Sampling Procedures

Marking took place from 28 July to 16 September 2005. The marking strata schedule (Table 1) started on Fridays and ended on Saturdays, except during the first and last strata. To spread capture effort throughout the day, fish were tagged during three 3-h daily sessions (beginning at 0800, 1200, 1600 hrs ADT). During these sessions, fish were tagged at both wheels simultaneously, except during the noon tagging session. Tagging activity during the noon session occurred on one wheel or the other and was alternated daily. In contrast to previous years (Apodaca et al. 2004; Apodaca and Daum 2005), we did not attempt to maintain a daily sample size goal, but rather kept daily sampling effort (time) consistent among days. During each marking session the crew docked to the fish wheel and used a dip net to capture fish directly from the fish wheel chute. Captured fish were tagged and released back into the river without being held. Fish with major injuries thought to impede migration were released without processing. To tag fish, an individually numbered and stratum-specific color-coded spaghetti tag (Table 2) was applied through the muscle at the posterior base of the dorsal fin with a hollow applicator needle. After application, the spaghetti tag was knotted 1.5 cm from the insertion point. The entire adipose fin was clipped with a pair of scissors as a secondary mark. Care was taken to minimize handling time and trauma for all fish captured.

Recovery Site Sampling Procedures

At the recovery site, the fish wheel was operated 24 hours a day from 29 July to 17 September 2005 (Table 1), with exceptions for maintenance and fish wheel repair. A video image capture system was installed on the recovery fish wheel using equipment described by Daum (2004). A camera was mounted above the fish wheel chute and video images of fish passing through the chute were sent to a laptop computer for processing using Salmonsoft FishCap 1.3.4 software (Salmonsoft, Portland, Oregon). A light-weight door with a magnetic switch was placed at the lower end of the chute. When the door was opened, the switch tripped and initiated video capture. The video system was set to take 15 video frames per capture event (six before the trigger event, one during the event, and eight after the event). The crew visited the fish wheel in the morning, afternoon, and evening to back-up files on the laptop and transfer video files to a microdrive for transport to camp. Fish were tallied daily from the video files using Salmonsoft FishRev 1.3.5 software. Numbers of marked and unmarked chum salmon and tag colors of marked fish were recorded and compiled for each sampling day. Fish with an undetermined tag status were tallied, but not utilized for abundance estimation. All video files were reviewed at least twice during the season to ensure counting accuracy.

Analysis of Mark and Recapture Data

Abundance estimate—For abundance estimation, we used SAS 8.2 software (SAS Institute, Inc. 1999) to process data files and SPAS software (Arnason et al. 1996) to compute Darroch estimates (Darroch 1961; Plante et al. 1998). The marking and recapture strata were lagged by one day to account for migration timing between the sites.

Travel time—For travel time analyses, each captured fish was categorized according to the number of strata between marking and recapture. To investigate travel patterns among years, we compared travel data from 2005 with travel data from three previous years.

Data comparisons—To investigate inter-annual trends in the estimated population of fall chum salmon in the upper drainage, we plotted annual point estimates and 95% confidence intervals (±1.96 x SE) from 1996 to 2005, except in 2000 when the project did not operate. We compared these point estimates with run reconstructions for all previous years that the project operated. The run reconstruction included the combined total of monitored tributary escapements above the study site (Chandalar and Sheenjek River sonar, and Fishing Branch River weir), harvest above the study area, and Canadian mark/recapture border passage estimate of fall chum salmon.

Data archiving—All past data and analysis results (1996-2005) have been compiled and archived onto a Fairbanks USFWS network drive and backups stored on CD disks.

Results

Analysis of Mark and Recapture Data

Summary of tagging and recovery fish wheel data—A total of 21,072 fall chum salmon were captured and released with color-coded spaghetti tags (Table 3). Of the 113,587 chum salmon examined from video recordings at the recovery site, 1,212 (≈1%) fish were tagged and tag status of 1,223 (≈1%) fish could not be determined (Table 3).

Abundance estimate—Based on seven weeks of mark-recapture data (Table 4), we estimated that 1,987,982 (SE 59,797) fish passed through the main-stem Yukon River above the Tanana River confluence during the sampling period (Table 5). Our weekly abundance estimates ranged from 122,126 (SE 12,767) to 531,981 (SE 41,301) fish.

Travel time—In 2005, out of 1,212 tagged fish that were recaptured at the recovery site, 1,130 (93%) were recaptured within the same weekly stratum in which they were marked, 76 (6%) were captured in the following stratum, and 6 (<1%) were captured 2 strata later (Figure 5).

Data comparisons—The estimated population of Yukon River fall chum salmon in 2005 exceeded the estimates obtained in all years since project inception (Figure 6). This population resurgence began in 2003. Based on poor escapements in the primary parent years of 1998-2001 (JTC 2006), the resurgence in the population during the past three years was not expected. The comparisons of our estimate (1,987,982 fish; SE 59,797) with an upper Yukon River run reconstruction indicated that our estimate was approximately 29% higher (Table 6).

Discussion

Based on seven weeks of mark-recapture data, we estimated that 1,987,982 (SE 59,797) chum salmon passed through the main-stem Yukon River above the Tanana River confluence during the sampling period. A comparison of the Rampart-Rapids fall chum salmon estimate with an upper Yukon River run reconstruction (Table 6) indicated that the Rampart-Rapids point estimate was 29% higher. Since a measure of precision for the run reconstruction is not available, it is difficult to determine how widely it might vary from the actual upper Yukon River fall chum salmon estimate.

Several factors may have contributed to the difference between our passage estimate and the run reconstruction in 2005. Obvious factors that could affect this comparison include: (1) variation between monitoring project schedules and run timing of fall chum salmon; (2) overlap in the run timing of summer and fall chum salmon; and (3) incomplete coverage of all possible spawning tributaries. The accuracy of this comparison is also dependent on the reliability of the Rampart-Rapids estimate, escapement assessments, subsistence harvest estimates, and the Canadian border passage estimate. In previous years, before 2004, our estimates have been within 20% of run reconstructions, indicating that the Rampart-Rapids estimate corroborated with other run indicators in the past. In contrast, the 2004 Rampart-Rapids estimate was, for unknown reasons, substantially greater (67%) then the run reconstruction. This year our estimate was 29% higher than the run reconstruction.

Similar to other models, the performance of the Darroch model is largely dependent on eliminating or at least minimizing departures from the assumptions of the model. For a detailed discussion of the model assumptions see Gordon et al. (1998). The assumptions of our model have been carefully tested over several years (Underwood et al. 2000a, 2000b, 2004; Underwood and Bromaghin 2003), and we have no reason to believe that the model assumptions were not met during the 2005 field season.

In the early part of the season, we suspect that a large proportion of tagged fish were summer chum salmon. The spatial and temporal overlap of summer and fall chum salmon in the middle river in late July makes it difficult to catch the first group of migrating fall chum salmon without also catching summer chum salmon. It is not feasible to distinguish between these two

runs based on morphology alone. Therefore, we are not able to selectively tag only fall chum salmon during times when both races are in the river. Genetic samples, which could be used to classify fish to race, have been collected from fish in several previous years, but have not yet been analyzed (Blair Flannery, USFWS, Conservation Genetics Laboratory, Anchorage, Alaska, personal communication). Genetic samples taken at Pilot Station in 2005 suggest that a large percent of the fish tagged in the first two strata could have been summer chum salmon (Russ Holder, USFWS, Fairbanks Fish and Wildlife Field Office, personal communication).

Due to the relatively low number of adult fall chum salmon that returned to the Yukon River between 1998 and 2002, the resurgence in the population size during the past three years (Figure 6) was unexpected based on poor parent year escapements. In 2005, the pre-season outlook on fall chum salmon run size was 776,409 fish (Bue and Lingnau 2005). The number of fall chum salmon that entered the Yukon River in 2005 was approximately 1,800,000 fish (reported by the Pilot Station Sonar Project), greatly exceeding the pre-season forecast and the upper management threshold of 600,000 fish (JTC 2006). The 2005 fall chum salmon run was the largest on record, dating back to 1974. This unexpected surplus resulted in the Alaskan commercial fishery harvesting over 180,000 fall chum salmon.

The underlying factors that drive population trends for Yukon River salmon are not well understood and are clearly not always directly linked to parent year escapement numbers. It is difficult to investigate the source of population fluctuations in Pacific salmon due to their complex life cycles that are split between marine, brackish, and fresh water environments during different life stages. Several investigators have suggested that climatic shifts influence productivity and in turn have a profound influence on the number of Pacific salmon recruits (Francis and Hare 1994; Beamish et al. 1999). Additionally, interactions in the marine environment with hatchery-reared fish (Meffe 1992; Noakes et al. 2000) and harvest in both the marine and freshwater environments can have an effect on population trends for some Pacific salmon species (Ricker 1954). Regardless of the primary factors that affect stock populations returning to the Yukon River, it is important to continue monitoring population trends of Yukon River fall chum salmon in the freshwater environment. In-season abundance estimates provide managers with crucial tools to make timely decisions on opening and closing the fall chum salmon fishery throughout the fishing season. The Rampart-Rapids project has provided in-season abundance estimates of fall chum salmon bound for upper Yukon River tributaries since 1996. The termination of this project after the 2005 season will reduce the information available for managing this vast fishery.

Acknowledgements

The USFWS, Office of Subsistence Management, provided $700,466 in funding support for this project through the Fisheries Resource Monitoring Program. This report was submitted as the Final Report to USFWS, Office of Subsistence Management for Project Number 04-217.

We would like to recognize the contributions of the seasonal technicians and volunteers including: T. Hugny, J. Jarvis, C. Leeseberg, S. O'Brien, D. Pecora, M. Plumb, D. Spencer, and J. Zuray. We appreciate Jeff Adams and Ken Russell for their supervisory oversight and administrative support, respectively. We thank Stan Zuray and Paul Evans for operating and maintaining the fish wheels throughout the season and providing invaluable assistance to the field crews on site. We thank Jeff Bromaghin for writing the SAS code used for data analysis,

providing statistical support, and for his comments on early drafts of this report. We appreciate the review of the final report by C. Schleusner and T. Underwood.

References

Arnason, A.N., C.W. Kirby, C.J. Schwarz, and J.R. Irvine. 1996. Computer analysis of data from stratified mark-recovery experiments for estimation of salmon escapements and other populations. Canadian Technical Report of Fisheries and Aquatic Sciences 2106, vi + 37p.

Apodaca, C.K., T.J. Underwood, J.F. Bromaghin, and D.W. Daum. 2004. Estimated abundance of adult fall chum salmon in the middle Yukon River, Alaska, 2003. U.S. Fish and Wildlife Service, Fairbanks Fish and Wildlife Field Office, Alaska Fisheries Technical Report Number 71, Fairbanks, Alaska.

Apodaca, C.K., and D.W. Daum. 2005. Estimated abundance of adult fall chum salmon in the middle Yukon River, Alaska, 2004. U.S. Fish and Wildlife Service, Fairbanks Fish and Wildlife Field Office, Alaska Fisheries Technical Report Number 85, Fairbanks, Alaska.

Beamish, R.J., D.J. Noakes, G.A. McFarlane, L. Klyashtorin, V.V. Ivanov, and V. Kurashov. 1999. The regime concept and natural trends in the production of Pacific salmon. Canadian Journal of Fisheries and Aquatic Sciences 56:516-526.

Brabets, T.P., B. Wang, and R.H. Meade. 2000. Environmental and hydrologic overview of the Yukon River Basin, Alaska and Canada. U.S. Geological Survey, Water-Resources Investigations Report, 99-4204.

Bromaghin, J.F., and T.J. Underwood. 2003. Evidence of residual effects from tagging Yukon River fall chum salmon in 2001. U.S. Fish and Wildlife Service, Alaska Fisheries Technical Report Number 67, Anchorage, Alaska.

Bromaghin, J.F., and T.J. Underwood. 2004. Evidence of residual effects from the capture and handling of Yukon River fall chum salmon in 2002. U.S. Fish and Wildlife Service, Alaska Fisheries Technical Report Number 70, Anchorage, Alaska.

Bromaghin, J.F., T.J. Underwood, and R. Hander. 2004. An evaluation of fall chum salmon mark rates upriver of the Rampart mark-recapture tagging site, Yukon River, Alaska, 2003. U.S. Fish and Wildlife Service, Alaska Fisheries Technical Report Number 76, Anchorage, Alaska.

Bue, F.J., and T.L. Lingnau. 2005. 2005 Yukon Area Subsistence, Personal Use, and Commercial Salmon Fisheries Outlook and Management Strategies. Fisheries Management Report No. 05-31.

Burek, K., and T.J. Underwood. 2002. Morbidity of tagged wild adult fall chum salmon captured by fish wheel in the Yukon River, Alaska. U.S. Fish and Wildlife Service, Fairbanks Fishery Resource Office, Alaska Fisheries Technical Report Number 60, Fairbanks, Alaska.

Darroch, J.N. 1961. The two-sample capture-recapture census when tagging and sampling are stratified. Biometrica 48:241-260.

Daum, D.W. 2004. Monitoring fish wheel catch using event-triggered video technology. North American Journal of Fisheries Management 25:322-328.

Francis, R.C., and S.R. Hare. 1994. Decadal-scale regime shifts in the large marine ecosystems of the North-east Pacific: a case for historical science. Fisheries Oceanography 3:279-291.

Gordon, J.A., S.P. Klosiewski, T.J. Underwood, and R.J. Brown. 1998. Estimated abundance of adult fall chum salmon in the upper Yukon River, Alaska, 1996. U.S. Fish and Wildlife Service, Fairbanks Fishery Resource Office, Alaska Fisheries Technical Report Number 45.

JTC (United States/Canada Yukon River Joint Technical Committee). 2006. Yukon River salmon 2005 season summary and 2006 season outlook. Regional Information Report No. 3A06-03. Alaska Department of Fish and Game, Division of Commercial Fisheries, AYK Region, Anchorage, Alaska.

Lingnau, T.L., and F.J. Bue. 2004. Overview of the Yukon River salmon fishery 2001-2003. A report to the Alaska Board of Fisheries. Alaska Department of Fish and Game, Division of Commercial Fisheries, AYK Region, Regional Informational Report No. 3A04-04, Anchorage, Alaska.

Meffe, G.K. 1992. Techno-arrogance and halfway technologies: Salmon hatcheries on the Pacific Coast of North America. Conservation Biology 6:350-354.

Noakes, D.J., R.J. Beamish, and M.L. Kent. 2000. On the decline of Pacific salmon and speculative links to salmon farming in British Columbia. Aquaculture 183:363-386.

Plante, N., L.P. Rivest, and G. Tremblay. 1998. Stratified capture-recapture estimation of the size of a closed population. Biometrica 54:47-60.

Ricker, W.E. 1954. Stock and Recruitment. Journal of the Fisheries and Research Board of Canada 11:559-623.

SAS Institute, Inc. 1999. SAS/STAT user's guide, version 8. SAS Institute, Inc., Cary, North Carolina, 3809 p.

Underwood, T.J., J.F. Bromaghin, and S.P. Klosiewski. 2004. Evidence of handling mortality of adult chum salmon caused by fish wheel capture in the Yukon River, Alaska. North American Journal of Fisheries Management 24: 237-243.

Underwood, T.J., and J.F. Bromaghin. 2003. Estimated abundance of adult fall chum salmon in the middle Yukon River, Alaska, 2000-2001. U.S. Fish and Wildlife Service, Fairbanks Fish and Wildlife Field Office, Alaska Fisheries Technical Report Number 62, Fairbanks, Alaska.

Underwood, T.J., J.F. Bromaghin, and S.P. Klosiewski. 2002. Evidence of handling mortality in fall chum salmon caused by fish wheel capture on the Yukon River, Alaska. U.S. Fish and Wildlife Service, Fairbanks Fishery Resource Office, Alaska Fisheries Technical Report Number 59, Fairbanks, Alaska.

Underwood, T.J., S.P., Klosiewski, J.A. Gordon, J.L. Melegari, and R.J. Brown. 2000a. Estimated abundance of adult fall chum salmon in the middle Yukon River, Alaska, 1997. U.S. Fish and Wildlife Service, Fairbanks Fishery Resource Office, Alaska Fisheries Technical Report Number 56, Fairbanks, Alaska.

Underwood, T.J., S.P. Klosiewski, J.L. Melegari, and R.J. Brown. 2000b. Estimated abundance of adult fall chum salmon in the middle Yukon River, Alaska, 1998-1999. U.S.

Fish and Wildlife Service, Fairbanks Fishery Resource Office, Alaska Fisheries Technical Report Number 57, Fairbanks, Alaska.

Table 1. Sampling stratum schedule for Rampart-Rapids fall chum salmon tagging and recovery efforts, 2005.

Stratum	Dates
	Marking site
1	Jul 28 through Aug 05
2	Aug 06 through Aug 12
3	Aug 13 through Aug 19
4	Aug 20 through Aug 26
5	Aug 27 through Sep 2
6	Sep 3 through Sep 9
7	Sep 10 through Sep 16
	Recapture site
1	Jul 29 through Aug 6
2	Aug 7 through Aug 13
3	Aug 14 through Aug 20
4	Aug 21 through Aug 27
5	Aug 28 through Sep 3
6	Sep 4 through Sep 10
7	Sep 11 through Sep 17

Table 2. Color sequence of spaghetti tags used to mark fall chum salmon at Rapids tagging site, 2005.

Stratum	Color
1	White
2	Pink
3	Green
4	White
5	Pink
6	Green
7	White

Table 3. Marking and recovery data for Rampart-Rapids fall chum salmon tagging project, 2005.

	Marking site	Recovery site				
Stratum	Number of tags deployed	Untagged catch	Tagged catch	Tag status unknown	Total	Percent tagged
1	3,246	11,911	199	67	12,177	1.64
2	2,414	9,244	139	78	9,461	1.48
3	2,020	7,104	118	64	7,286	1.63
4	3,806	28,188	216	374	28,778	0.76
5	4,240	23,249	186	237	23,672	0.79
6	2,835	11,873	165	99	12,137	1.37
7	2,511	19,583	189	304	20,076	0.96
Total	21,072	111,152	1,212	1,223	113,587	1.08

Table 4. Data from Rampart-Rapids fall chum salmon marking and recapture in 2005, and associated counts of unmarked fish with a one day lag time.

		Recapture stratum							
Marking stratum	Tags released	1	2	3	4	5	6	7	Fish not captured
		Recapture data							
1	3,246	199	5	1	0	0	0	0	3,041
2	2,414	0	134	12	1	0	0	0	2,267
3	2,020	0	0	105	10	0	0	0	1,905
4	3,806	0	0	0	205	10	1	0	3,590
5	4,240	0	0	0	0	176	20	3	4,041
6	2,835	0	0	0	0	0	144	19	2,672
7	2,511	0	0	0	0	0	0	167	3,344
		Tagged and untagged fish captured in the recovery wheel							
Strata 1-7		12,110	9,383	7,222	28,404	23,435	12,038	19,772	

Table 5. Stratum and season estimates of abundance, the probability of capture, and associated measures of precision (SE= standard error, CV= coefficient of variation) for the 2005 run of Yukon River fall chum salmon past Rampart-Rapids study area. Dates for weekly strata are based on the marking site strata schedule.

		Abundance			Capture probability		
Stratum	Date	Estimate	SE	CV	Estimate	SE	CV
			Strata estimates				
1	Jul 28-Aug 5	197,533	13,887	0.07	0.016	0.001	0.06
2	Aug 6-12	163,553	14,239	0.09	0.015	0.001	0.07
3	Aug 13-19	122,126	12,767	0.10	0.017	0.002	0.12
4	Aug 20-26	514,862	36,039	0.07	0.007	0.001	0.14
5	Aug 27-Sep 2	531,981	41,301	0.08	0.008	0.001	0.13
6	Sep 3-9	184,932	19,407	0.10	0.015	0.002	0.13
7	Sep 10-16	272,995	21,781	0.08	0.009	0.001	0.11
			Season estimate				
1-7	Jul 28-Sep 16	1,987,982	59,797	0.03			

Table 6. Comparison of the annual Darroch estimate with measured components of the run (tributary escapement, harvest, and Canadian border passage) upstream of the Rampart-Rapids study area from 1996 to 2005, except in 2000 when the project did not operate for the full season.

	Years								
Description	1996	1997	1998	1999	2001	2002	2003	2004	2005
Escapement projects, border passage, and harvest above study area									
Chandalar River	208,170	199,874	75,811	88,662	110,971	89,850	214,416	136,706	496,494
Sheenjek River	246,889	80,423	33,058	14,229	53,932	31,642	44,047	37,878	438,253
Fishing Branch River	77,278	26,959	13,564	12,094	21,669	13,563	29,519	20,274	121,413
Mainstem border passage	143,758	94,725	48,047	72,188	38,769	104,853	153,656	163,625	451,477
Sum of harvest [a]	32,131	28,145	5,683	28,583	7,808	4,041	13,837	11,990	31,061 [b]
Comparison of Rampart-Rapids estimate with the sum of escapement, harvest, and border passage									
Rampart-Rapids estimate	654,296	369,547	194,963	189,741	201,766	196,186	485,102	618,579	1,987,982
Sum of escapement, harvest, and border passage	708,226	430,126	176,163	215,756	233,149	243,949	455,475	370,473	1,538,698 [b]
Percent difference	-8	-14	11	-12	-13	-20	7	67	29

[a] Harvest data are from subsistence reporting areas between Rampart-Rapids and the Canadian border.

[b] Preliminary estimate pending completion of final project reports.

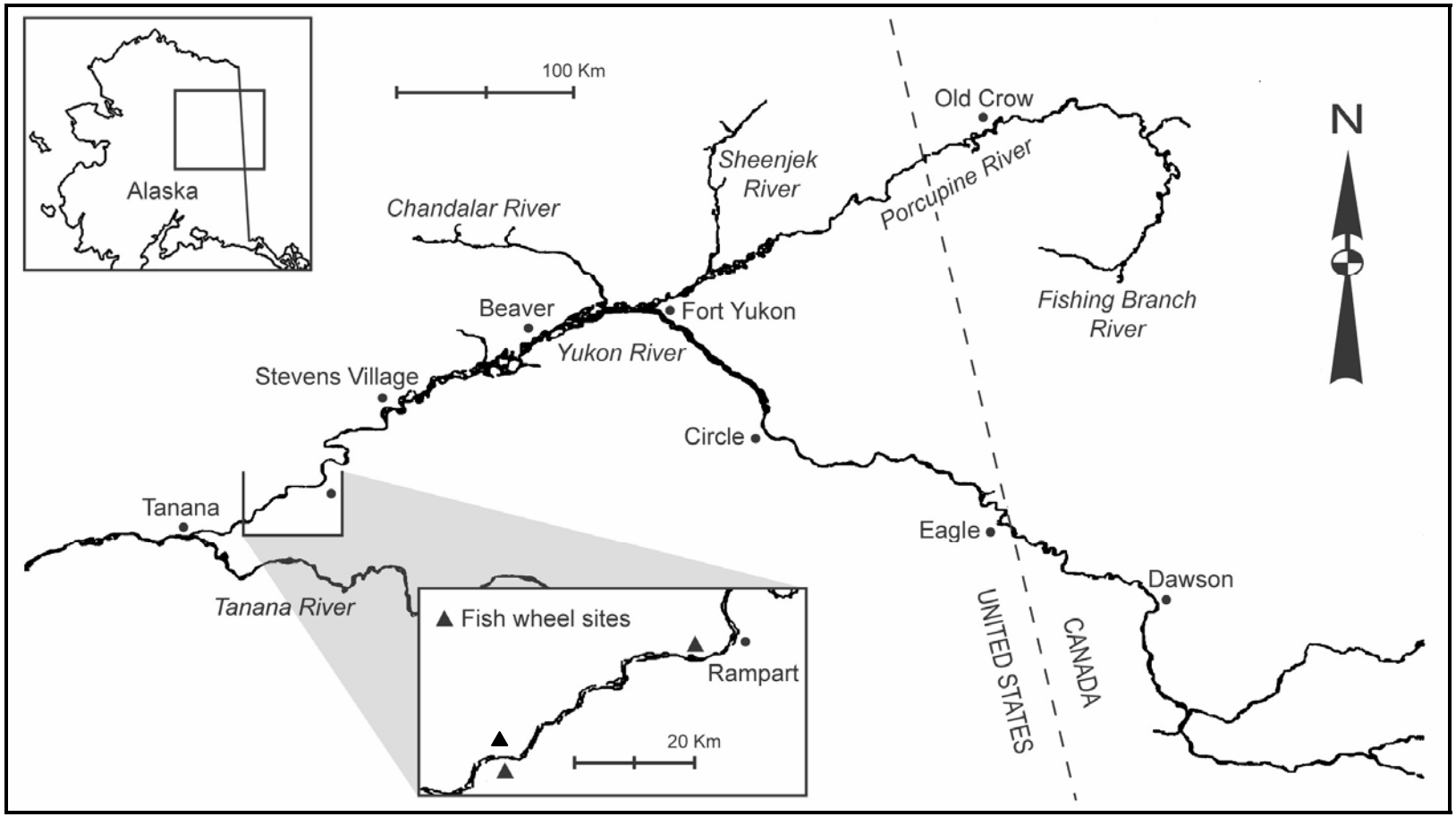

Figure 1. Map of the Yukon River drainage with an inset of the Rampart-Rapids study area. The marking and recapture fish wheels are indicated with triangles.

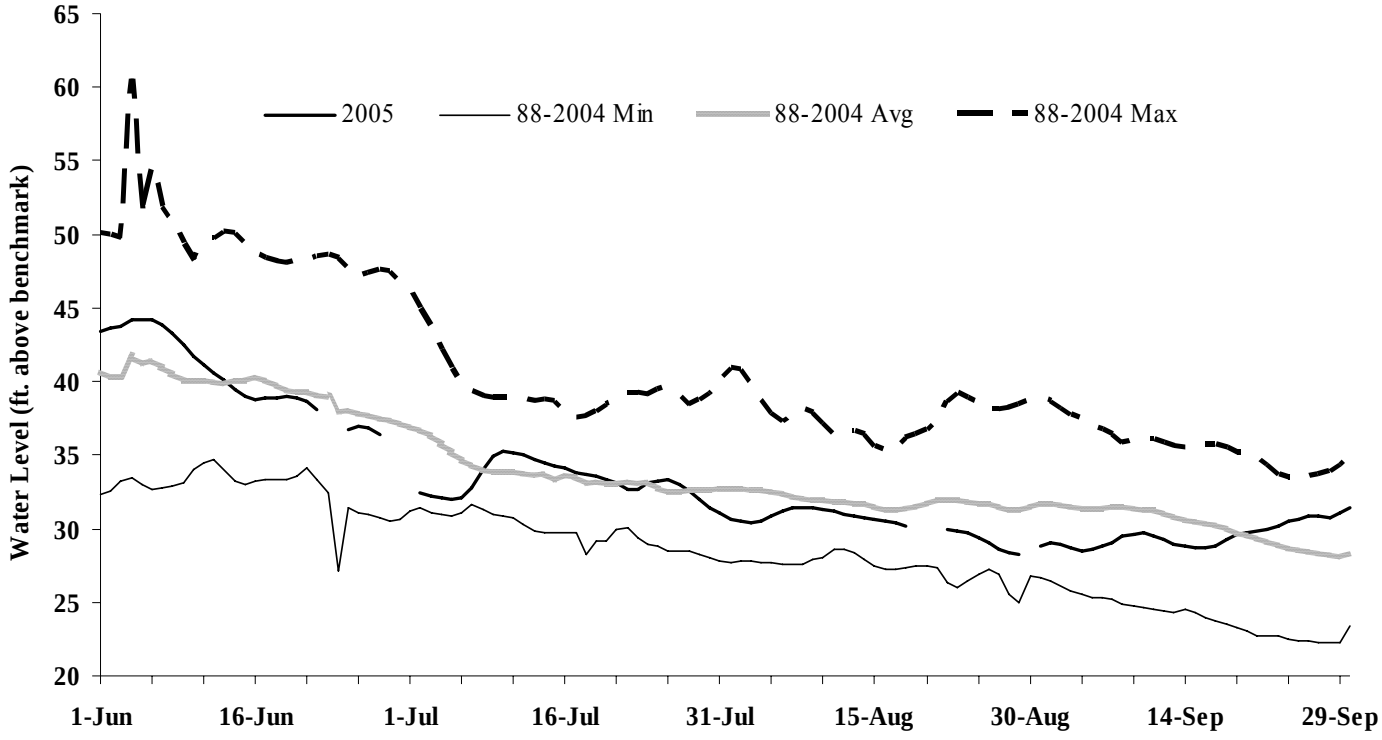

Figure 2. Preliminary average daily water height measured in feet at a fixed USGS gauging station on the Yukon River, near the Dalton Highway. Daily measures are presented for 2005 in comparison with the averages for historical data from 1988-2004 (data compiled by Bonnie Borba, ADF&G).

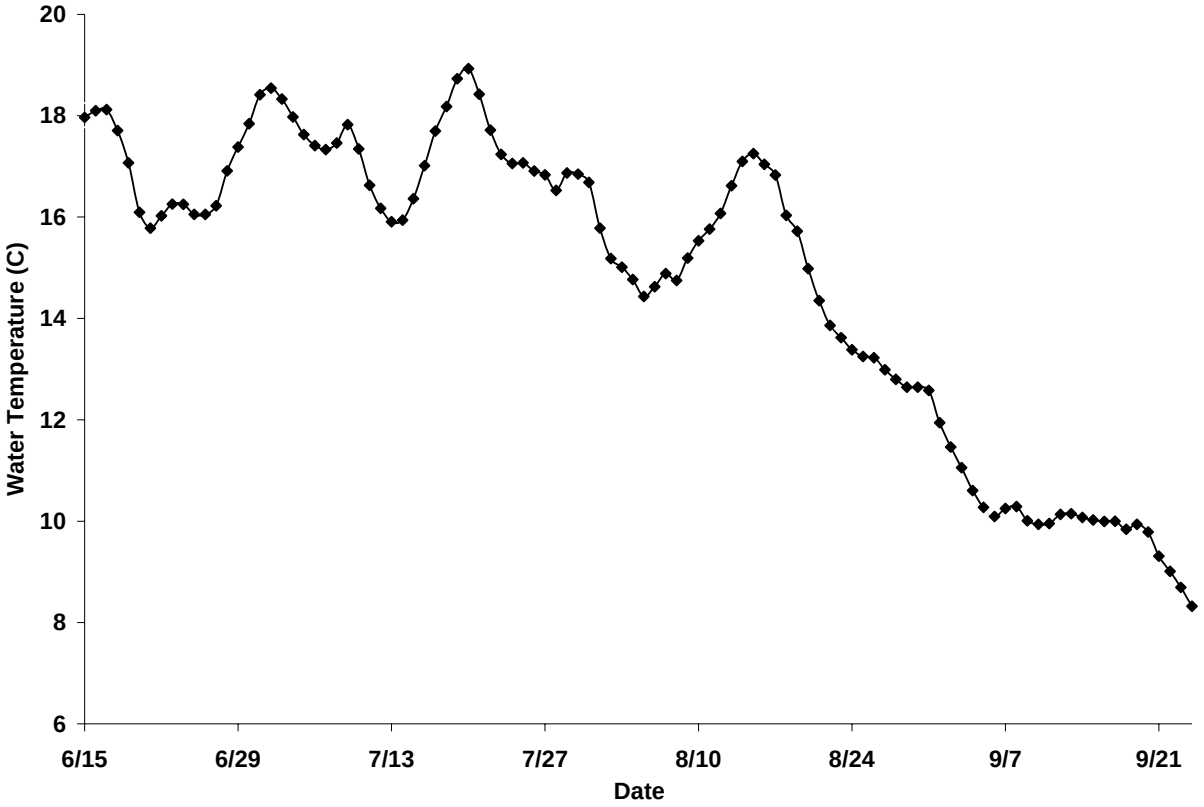

Figure 3. Average daily water temperature measured with an Onset Stow Away TidbiT© water temperature data logger from 15 June to 24 September 2005, Rapids study site.

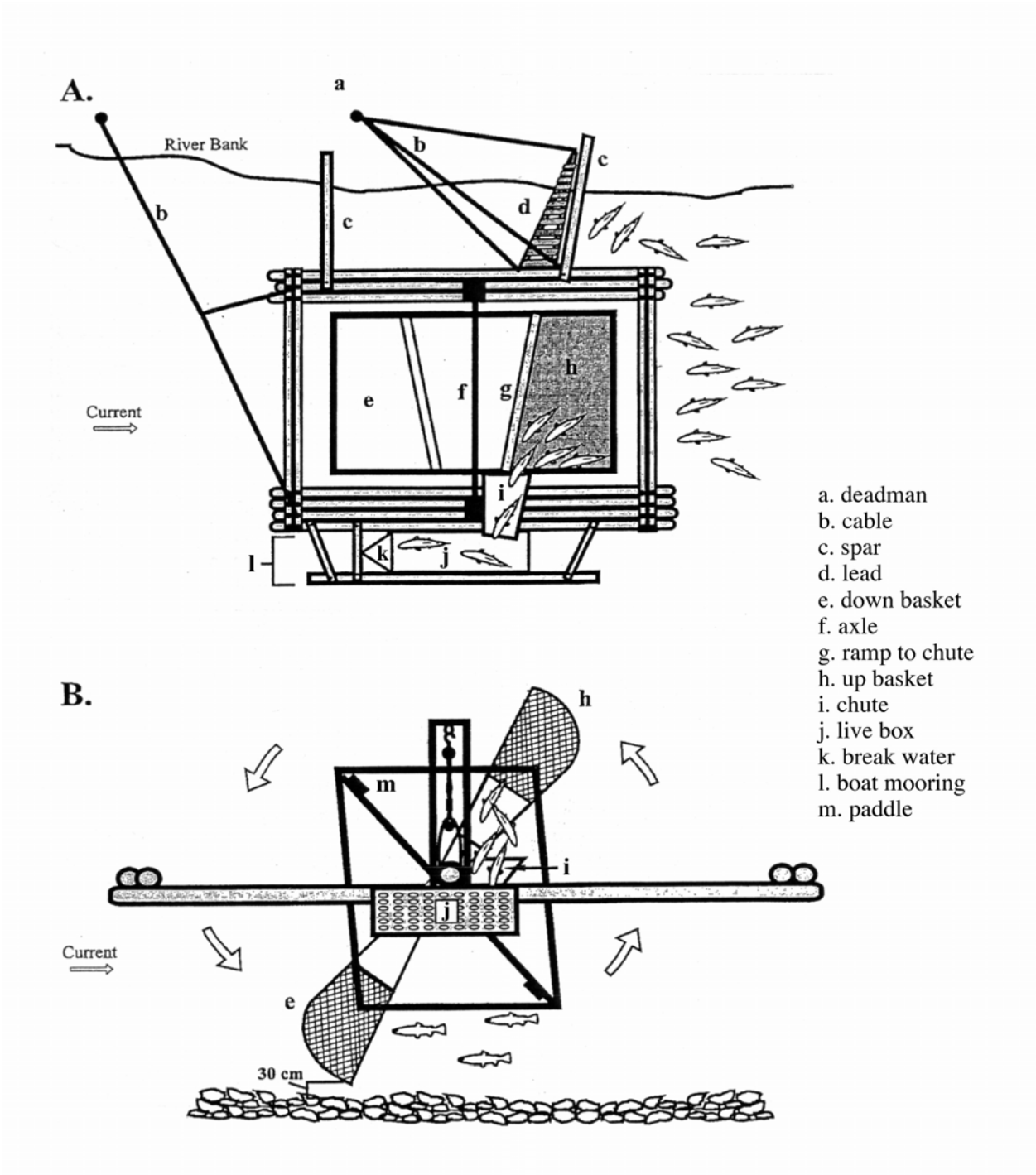

Figure 4. Two-basket fish wheel equipped with padded chute. A. Aerial view. B. Side view with arrows indicating the direction of wheel movement in response to the current.

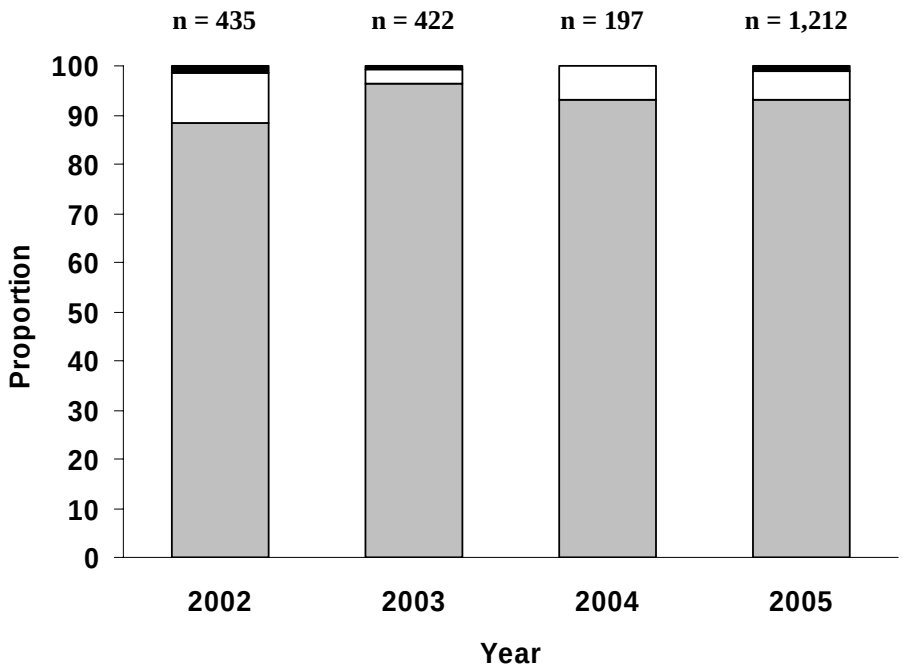

Figure 5. Proportion of Yukon River fall chum salmon recaptures in Rampart, Alaska from 2002 to 2005 within the same weekly stratum (gray), recaptured in the stratum following their marking stratum (white), and recaptured in a stratum two weeks or later after their marking stratum (black).

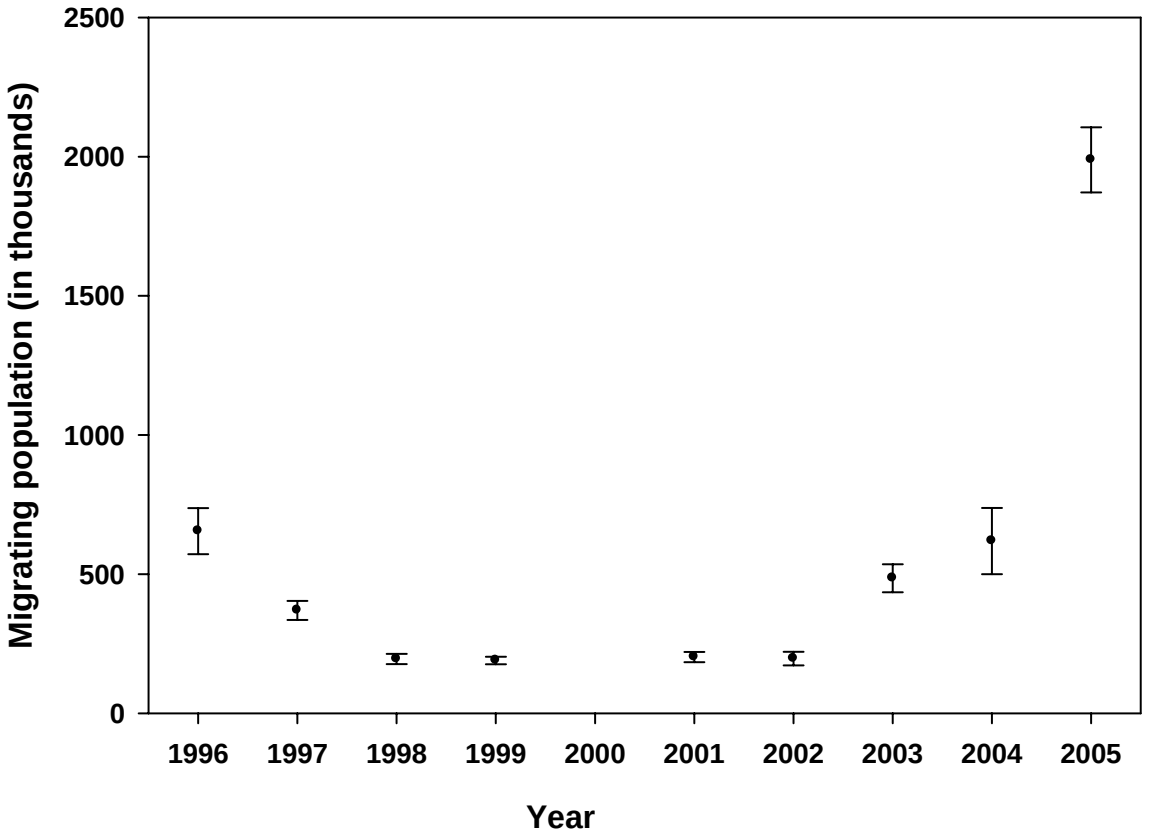

Figure 6. Population estimates of Yukon River fall chum salmon at Rampart-Rapids study area and 95% confidence intervals (±1.96 x SE) from 1996 to 2005, excluding 2000. A seasonal estimate was not generated in 2000 because the project did not operate for the full season.

Appendix 1. Annotated Bibliography

Abundance Estimate

Gordon, J.A., S.P. Klosiewski, T.J. Underwood, and R.J. Brown. 1998. Estimated abundance of adult fall chum salmon in the upper Yukon River, Alaska, 1996. U.S. Fish and Wildlife Service, Fairbanks Fishery Resource Office, Alaska Fisheries Technical Report Number 45, Fairbanks, Alaska.

This was the initial year of the mark-recapture experiment to estimate fall chum salmon in the Yukon River, above the Tanana River confluence. Two fish wheels were used to mark fish at the tagging site and two fish wheels, sited 50 km upstream, were used for the recapture event. Fish were held in fish wheel live boxes on average 8.1 hours before marking with individually numbered spaghetti tags and released. The Darroch model (Darroch 1961) was used to generate, in-season, weekly, and seasonal abundance estimates. Model assumptions concerning probability of recapture and movement of marked and unmarked individuals may have been violated but were difficult to assess. No tag loss was observed between the marking and recapture sites and fish were randomly mixed between sites. The seasonal estimate of 654,296 (SE 21,351) fall chum salmon was 8% below an independent estimate from up-river escapement projects and reported harvest (Table 6). Future project recommendations included collection of additional size and sex information at the recapture site to allow for possible sex and length stratification using the Darroch model.

Underwood, T.J., S.P., Klosiewski, J.A. Gordon, J.L. Melegari, and R.J. Brown. 2000. Estimated abundance of adult fall chum salmon in the middle Yukon River, Alaska, 1997. U.S. Fish and Wildlife Service, Fairbanks Fishery Resource Office, Alaska Fisheries Technical Report Number 56, Fairbanks, Alaska.

A second season was successfully completed for estimating fall chum salmon passage in the middle Yukon River. The marking and recapture fish wheels were equipped with nylon netting and padded exit chutes to reduce harm to captured fish. Fish were held in fish wheel live boxes on average 4.3 hours before tagging and release, a reduction of 4 hours from 1996. In addition to data being collected at the marking site, length and sex data were also collected from fish captured at the recapture site, allowing for stratification of the population estimate by length and sex. The probability of recapture was associated with fish length and sex for two of the nine weeks; however, the population estimate stratified by sex and length was determined to be insignificant from the original non-stratified estimate. As in 1996, no tag loss was observed between the marking and recapture sites and fish were randomly mixed between sites. Tag loss was also investigated upstream of the recapture site with no tag loss recorded from seven sites between Fort Yukon and Canada. The seasonal estimate of 369,547 (SE 8,693) fall chum salmon was 14% below an independent estimate from up-river escapement projects and reported harvest (Table 6). Additional information was reported from upper basin fishing areas where very low ratios of marked to unmarked chum salmon were found compared to the Rampart recovery site. Several potential hypotheses were explored concerning the low representation of marked fish in upriver catches. Delayed mortality from handling-caused stress was postulated as the probable cause of this phenomenon, and further investigation into this problem was encouraged (an annotated bibliography of handling effects studies follows this section).

Underwood, T.J., S.P. Klosiewski, J.L. Melegari, and R.J. Brown. 2000. Estimated abundance of adult fall chum salmon in the middle Yukon River, Alaska, 1998-1999. U.S. Fish and Wildlife Service, Fairbanks Fishery Resource Office, Alaska Fisheries Technical Report Number 57, Fairbanks, Alaska.

This report presented data from the 1998 and 1999 seasons. Estimates of fall chum abundance were successful for both years. Holding times at the tagging site were further reduced from previous years, averaging 2.9 hours in 1998 and 1.7 hours in 1999. As in 1997, length and sex data were collected from all fish captured. A limited selective sampling bias by fish length and sex was detected in 1999 but the stratified and non-stratified estimates were similar. As in previous years, no tag loss was observed. Nonrandom mixing between sites was detected for the first time in 1999, but the estimate appeared robust to this assumption violation. The seasonal fall chum salmon estimates were 194,963 fish (SE 9,397) in 1998 and 189,741 fish (SE 6,967) in 1999. The 1998 estimate was 11% above and the 1999 estimate was 12% below an independent estimate of up-river escapement projects and reported harvest for each year (Table 6).

Underwood, T.J., and J.F. Bromaghin. 2003. Estimated abundance of adult fall chum salmon in the middle Yukon River, Alaska, 2000-2001. U.S. Fish and Wildlife Service, Fairbanks Fish and Wildlife Field Office, Alaska Fisheries Technical Report Number 62, Fairbanks, Alaska.

This report presented data from the 2000 and 2001 seasons. In 2000, the project was terminated after only 2 weeks of operation because of conservation concerns related to a low projected run size and uncertainty regarding handling mortality at the fish wheels. In 2001, a successfully completed abundance estimate was obtained for the season. The number of fish wheels used in the recovery effort was reduced from two to one. Holding times were further reduced from previous years with the addition of a field crew stationed at the recovery site. No recapture probability bias was detected for both years based on fish length, sex, or bank of tag release, so the estimates were only stratified temporally by week. No tag loss was recorded. The abundance estimate for the partial 2000 season was 38,979 (SE 2,080) fall chum salmon and for 2001 was 201,766 fish (SE 9,578). The 2001 estimate was 13% below an independent estimate from up-river escapement projects and reported harvest (Table 6). To reduce future project costs and minimize associated mortality from handling, development of a computer-based video capture system was proposed that would replace the crew at the Rampart recovery site (Daum 2004).

Underwood, T.J., C.K. Apodaca, J.F. Bromaghin, and D.W. Daum. 2004. Estimated abundance of adult fall chum salmon in the middle Yukon River, Alaska, 2002. U.S. Fish and Wildlife Service, Fairbanks Fish and Wildlife Field Office, Alaska Fisheries Technical Report Number 66, Fairbanks, Alaska.

The seventh season of estimating fall chum salmon passage in the middle Yukon River was successful. Marking and recapture procedures were similar to 2001. No recapture probability bias was detected based on fish length, sex, or bank of tag release, so the estimate was only stratified temporally by week. No evidence of tag loss was found, representing seven years of tagging with no tag loss reported. The seasonal estimate of 196,186 (SE 12,546) fall chum salmon was 20% below an independent estimate from up-river escapement projects and reported harvest (Table 6). A video-recapture feasibility study was run concurrently with the traditional crew recovery effort in 2002. Independent abundance estimates generated from the two recapture methods were within 1% of each other. Switching to a video-recapture system in 2003 was recommended.

Apodaca, C.K., T.J. Underwood, J.F. Bromaghin, and D.W. Daum. 2004. Estimated abundance of adult fall chum salmon in the middle Yukon River, Alaska, 2003. U.S. Fish and Wildlife Service, Fairbanks Fish and Wildlife Field Office, Alaska Fisheries Technical Report Number 71, Fairbanks, Alaska.

This marked the eighth season that the project was successfully completed. For the first time, fish were not held at the marking or recovery site. At the tagging site, fish were tagged and released immediately after capture. At the recovery site, a video system was installed that recorded video images of captured fish, eliminating holding. Fish were batch-marked by week using a stratum-specific, color-coded spaghetti tag. At the recovery site, tag colors from recaptured fish were identified from the video images so a population estimate stratified temporally by week could be obtained, similar to past years. Because of the procedural changes relating to reduced fish handling and video recovery, assessments of bias relating to fish length, sex, or bank of tag release were not possible. Based on results from previous years when bias was marginally detected, changes to the non-stratified seasonal estimate and standard error were deemed insignificant. The 2003 seasonal estimate of 485,102 (SE 25,737) fall chum salmon was 7% above an independent estimate from up-river escapement projects and reported harvest (Table 6).

Apodaca, C.K., and D.W. Daum. 2005. Estimated abundance of adult fall chum salmon in the middle Yukon River, Alaska, 2004. U.S. Fish and Wildlife Service, Fairbanks Fish and Wildlife Field Office, Alaska Fisheries Technical Report Number 85, Fairbanks, Alaska.

The ninth season of estimating fall chum salmon passage in the middle Yukon River was successfully completed. As in 2003, fish were immediate released after capture at both the marking and recovery sites. To reduce operational costs, one fish wheel was eliminated at the marking site, resulting in one wheel used for tagging and one wheel used for recapture. Similar to 2003, the video system was installed at the recovery site for identifying marked and unmarked fish as they were captured in the fish wheel. The 2004 estimate was temporally stratified by week, with weekly and seasonal estimates produced in-season. The seasonal abundance estimate for 2004 was 618,579 (SE 60,714) fall chum salmon; 67% greater than an independent estimate from up-river escapement projects and reported harvest (Table 6). Since the assumptions of the Darroch estimator had been carefully tested over the preceding years of this project, there was little reason to believe that the model had failed. Several factors were identified that may have influenced the model's performance in 2004: unusually low capture rates of tagged fish at the recovery site (0.7%); low capture rates at the marking site, especially during weeks 4 and 8; and abnormally low water levels late in the season that may have affected fish wheel operations and fish behavior. The influence of sample size on the model's performance was investigated. Results from these simulations suggested that increasing the probability of capture at either the marking or recovery site would decrease the likelihood of the estimate's variance to increase during times of low fish capture rates. It was recommended that for the 2005 season a second tagging wheel would be used during times of low fish capture rates and an additional day would be added to the tagging schedule (in past years no fish were tagged on Sunday).

Apodaca, C.K., and D.W. Daum. 2006. Estimated abundance of adult fall chum salmon in the middle Yukon River, Alaska, 2005 – final report. U.S. Fish and Wildlife Service, Fairbanks Fish and Wildlife Field Office, Alaska Fisheries Technical Report Number 89, Fairbanks, Alaska.

This was the tenth and final year of the project. The abundance estimate for fall chum salmon was successfully completed. An additional fish wheel was added to the marking site and fish

were tagged seven days per week. The 2005 seasonal abundance estimate of 1,987,982 (SE 59,797) fall chum salmon was 29% above an independent estimate from up-river escapement projects and reported harvest (Table 6). Since the assumptions of the Darroch estimator had been carefully tested over the preceding years of this project, there was little reason to believe that the model had failed. A suspected, large number of summer chum salmon may have been included in the first two tagging strata, causing the estimate to become artificially inflated. Selective tagging and recapture of fall chum salmon is not possible because phenotypic identification alone can not distinguish between the two chum salmon races. Project costs, reduced federal funding, and re-prioritization of in-season run assessment projects prior to the 2006 season resulted in cancellation of the project.

Handling Effects

Underwood, T.J., J.F. Bromaghin, and S.P. Klosiewski. 2002. Evidence of handling mortality in fall chum salmon caused by fish wheel capture on the Yukon River, Alaska. U.S. Fish and Wildlife Service, Fairbanks Fishery Resource Office, Alaska Fisheries Technical Report Number 59, Fairbanks, Alaska.

This report described a study conducted, in conjunction with the abundance estimates, from 1996-1998 to examine the potential effects of fish wheel handling on tagged fall chum salmon. Tagged and untagged fish were recorded at fishing sites located upstream from the four fish wheels used in the abundance estimate, i.e., upstream of Rampart. These sites were distributed throughout the upper Yukon River basin in Alaska and Canada. In addition, the number of times individually-tagged fish were captured and released from fish wheels associated with the abundance estimate project were recorded. It was found that the probability of recapturing these tagged fish upstream of Rampart decreased as the number of times a fish was captured increased. Also, data indicated that the ratio of marked to unmarked fish captured by upstream fishers decreased as the distance upstream from Rampart increased. One possible explanation for these observations was that one or more aspects of fish capture and handling procedures used during the abundance estimate project increased mortality rates of tagged fish. Recommendations were offered that included investigating further the effects of handling fish after fish wheel capture, developing construction techniques and operations of fish wheels that minimized possible harm to captured fish, and exploring alternatives to current live box capture practices.

Underwood, T.J., J.F. Bromaghin, and S.P. Klosiewski. 2004. Evidence of handling mortality of adult chum salmon caused by fish wheel capture in the Yukon River, Alaska. North American Journal of Fisheries Management 24: 237-243.

This peer-reviewed journal article included the information gathered in 1996-1998 and presented in the preceding article, Underwood, T.J., J.F. Bromaghin, and S.P. Klosiewski (2002).

Burek, K., and T.J. Underwood. 2002. Morbidity of tagged wild adult fall chum salmon captured by fish wheel in the Yukon River, Alaska. U.S. Fish and Wildlife Service, Fairbanks Fishery Resource Office, Alaska Fisheries Technical Report Number 60, Fairbanks, Alaska.

This report described a 1998 investigation into the causes of mortality and morbidity of tagged chum salmon sampled during the abundance estimate project on the middle Yukon River. A small sample of untagged fish were bled and necropsied at the marking and recovery site, along with a sample of tagged fish from the recovery site. The untagged fish were used as a control. Besides investigating if there was tag-specific morbidity, the study also described histological changes in migrating chum salmon, and identified potential pathogens in the sampled population.

Full necropsies included external lesions, weight, length, hematology, bacteriology, ELISA for bacterial kidney disease antigen, and semi-quantitative histopathology. None of these analyses indicated a definitive cause for mortality or morbidity specific to tagged fish. Local damage to tissue at the tag site, higher neutrophil counts, and lower total protein were found in tagged fish suggesting further study into the possibility of infection as a cause of mortality. There was only one weak positive for an antigen of the bacterial kidney disease agent indicating that this disease was not a significant factor in morbidity. Blood smears were negative for viral erythrocytic necrosis inclusion bodies. Lesions suggestive of other major infectious diseases were not evident. A mild to moderate infection of *Ichthyophonus hoferi* (common in Yukon River Chinook salmon) was detected in two chum salmon. Recommendations for future work included using sample sites further apart to observe differences in survival, increasing sample sizes, and more complete hematology, clinical chemistries, virology, and histopathology.

Bromaghin, J.F., and T.J. Underwood. 2003. Evidence of residual effects from tagging Yukon River fall chum salmon in 2001. U.S. Fish and Wildlife Service, Alaska Fisheries Technical Report Number 67, Anchorage, Alaska.

This 2001 study examined the recapture probability of holding tagged chum salmon in fish wheel live boxes for various times before release. Fish were tagged at the marking site and either immediately released or held in live boxes for up to 5.8 hours before release. Fish were recaptured upstream at four sites: Rampart, Beaver, Circle, and Canada. Results found that fish held for longer periods of time had a higher probability of recapture at the marking site, traveled more slowly between the marking and Rampart recovery sites, and had a higher probability of recapture at the Rampart recovery site. Conversely, increased holding times were associated with a reduced probability of recapture at the more distant upstream sampling locations. Marked to unmarked ratios declined as upstream distance from the marking site increased in both immediately released and held fish. Even though holding fish in live boxes appeared to negatively affect their ability to migrate upstream, the reduced mark rates observed at upriver locations could not be fully explained. It was recommended that another year of study would be needed to verify results. Also, an attempt should be made to increase the sample sizes of fish tagged at the marking site and examined at the recovery sites.

Bromaghin, J.F., and T.J. Underwood. 2004. Evidence of residual effects from the capture and handling of Yukon River fall chum salmon in 2002. U.S. Fish and Wildlife Service, Alaska Fisheries Technical Report Number 70, Anchorage, Alaska.

This 2002 investigation was a continuation of the study initiated in 2001 to document the effects of holding fish in fish wheel live boxes. Fish were tagged at the marking site and either immediately released or held in live boxes for up to 9.6 hours (increased from the 2001 study). Held fish were also subjected to varying degrees of crowding in the live box before release. An additional upstream (mid-distance) recapture site was added at Stevens Village, resulting in five recapture sites. Digital photos were taken of fish recaptured upstream of the tagging site to document tag loss. No incidence of tag loss was observed. As in 2001, tagged fish held for longer periods of time had a higher probability of recapture at the marking and Rampart recovery site. However, unlike the 2001 results, increased holding times were not associated with a reduced probability of recapture at distant upstream recapture locations. As crowding conditions in the live box increased, fish were found to travel more slowly between the marking and Rampart recovery sites. Similar to other years, marked to unmarked ratios declined as upstream distance from the marking site increased, though the mid-distance site at Stevens Village showed a slight increase. Results suggested that holding fall chum salmon in fish wheel live boxes

appeared to negatively affect their ability to migrate, but these measures of the conditions under which fish were held did not fully explain the reduced mark rates observed at the more distant upriver locations. Future studies were encouraged to further investigate potential causes of this phenomenon.

Bromaghin, J.F., T.J. Underwood, and R. Hander. 2004. An evaluation of fall chum salmon mark rates upriver of the Rampart mark-recapture tagging site, Yukon River, Alaska, 2003. U.S. Fish and Wildlife Service, Alaska Fisheries Technical Report Number 76, Anchorage, Alaska.

This report described work done in 2003 to further address the issue of low rates of tagged fish observed in upstream catches. Additional data were collected from upriver fall chum spawning areas to examine the possibility of different populations of chum salmon having unequal probabilities of capture at the marking site. Spawning ground surveys of the Chandalar and Sheenjek rivers were conducted, counting marked and unmarked salmon carcasses, along with data collected from two salmon enumeration projects in Canada. It was found that the mark rates in these four upper basin areas were not significantly different from each other, but the mark rate of the pooled areas was significantly lower than at the Rampart recapture site. This observation was consistent with past years where approximately a 50% reduction in the mark rate was found in upriver sampling areas compared to the Rampart recovery site. Another study hypothesis was tested that addressed the possibility that tagged fish were spatially segregated from untagged fish at the Rampart recapture site, violating the model's assumption of equal mixing. Gill nets were drifted offshore of the fish wheel and catches of marked and unmarked fish were compared with fish wheel catches. No significant differences were found between offshore and onshore catch rates, and the marked ratios were nearly identical. The report concluded that after considerable investigation, a delayed and progressive mortality upriver of the study area (Rampart tag recovery site) remained the single potential cause of reduced mark rates found upriver and was most consistent with the available data.